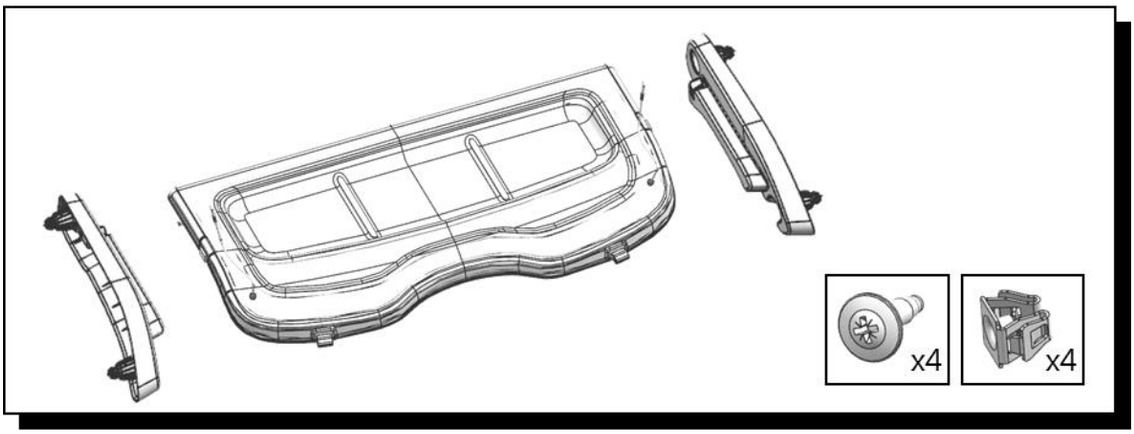
x4
x4

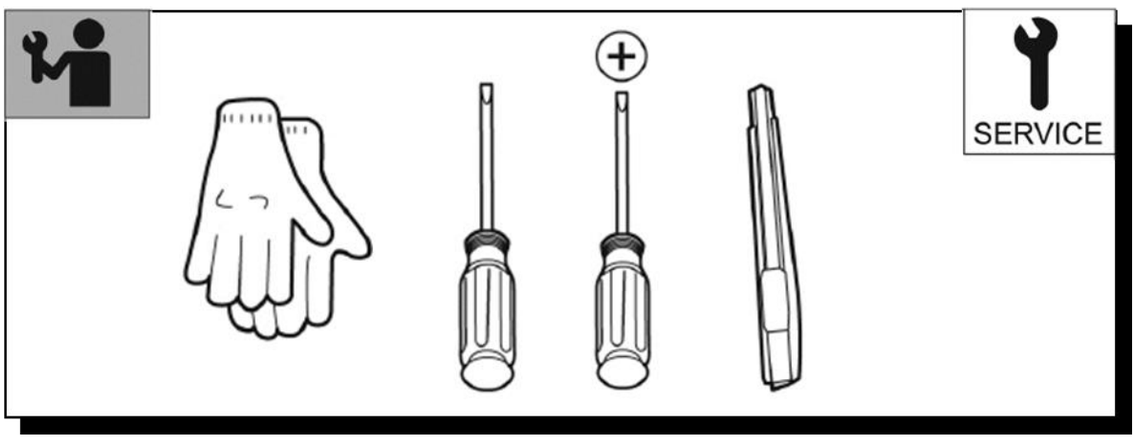
SERVICE

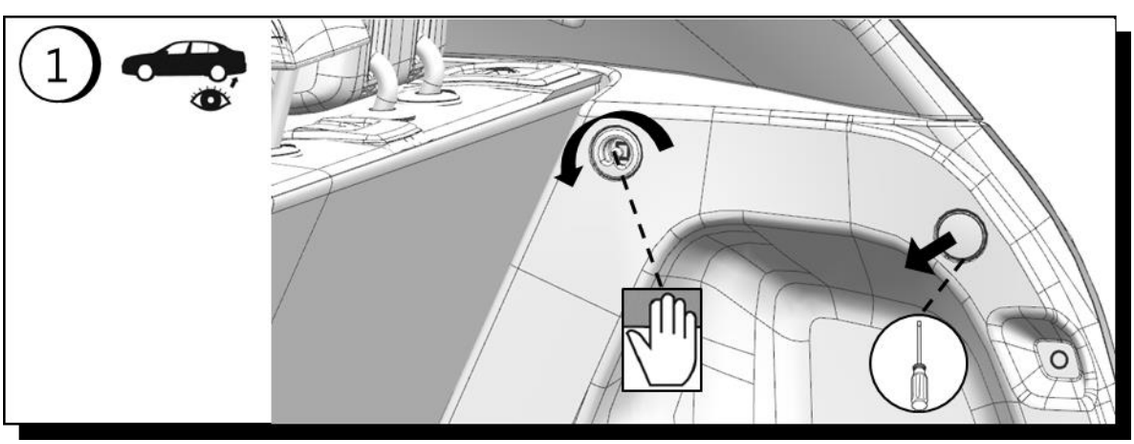
1

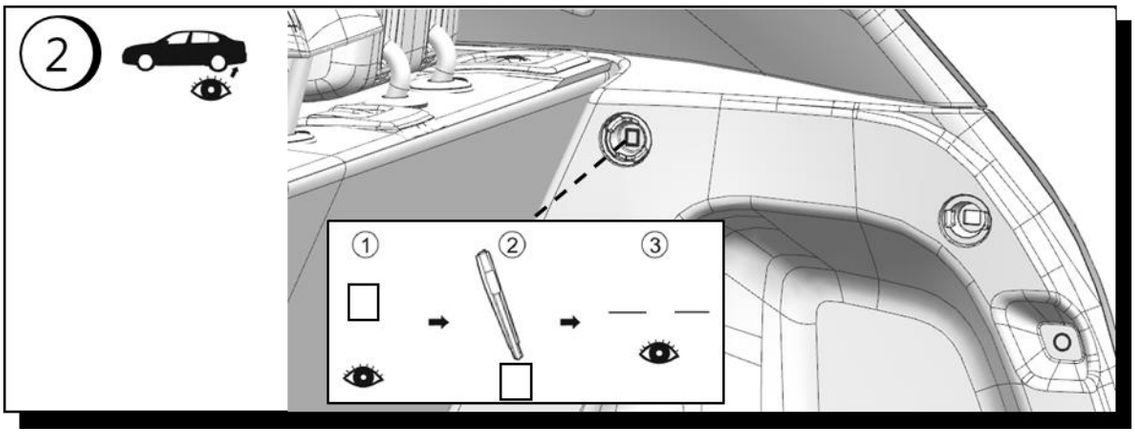
2
1
2
3

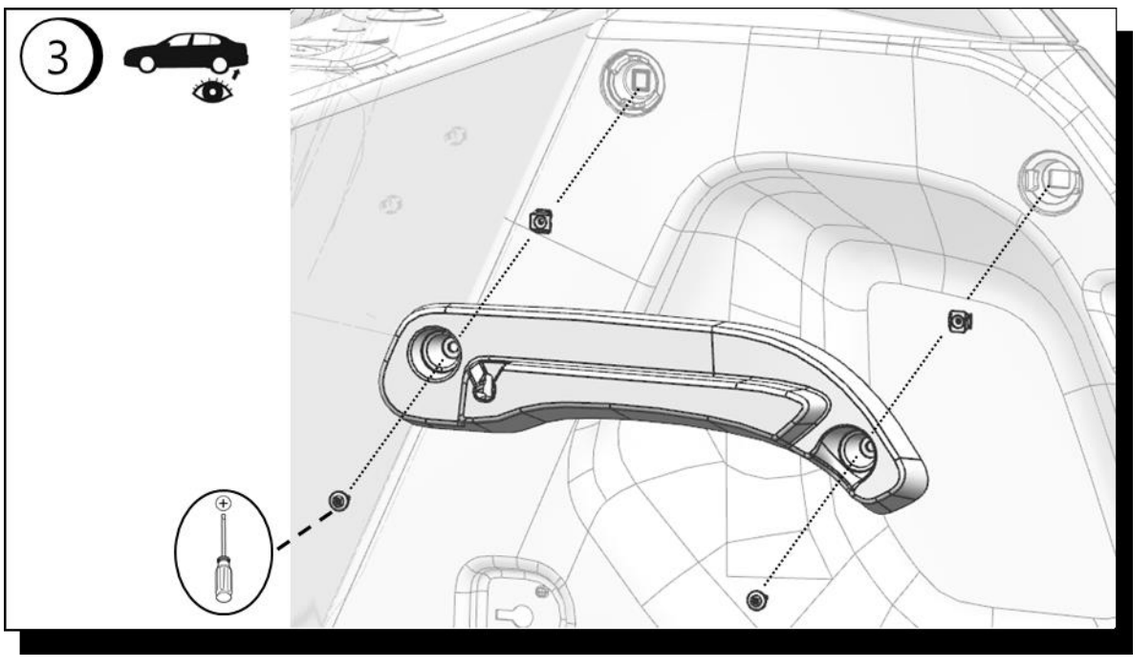
3

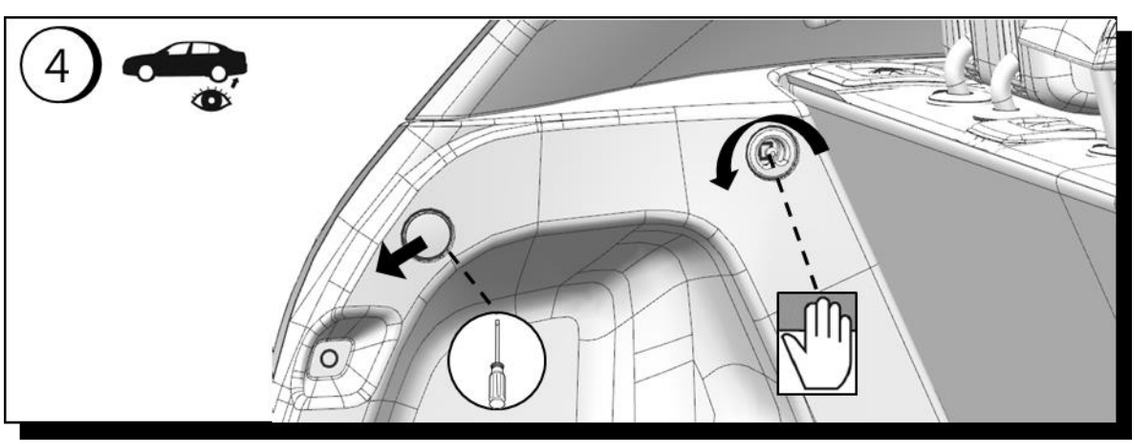
4

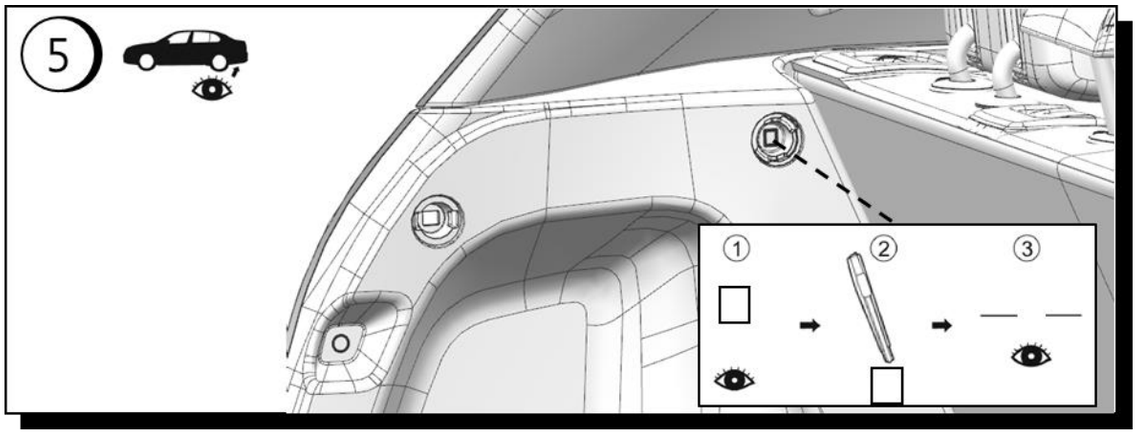
5
1
2
3

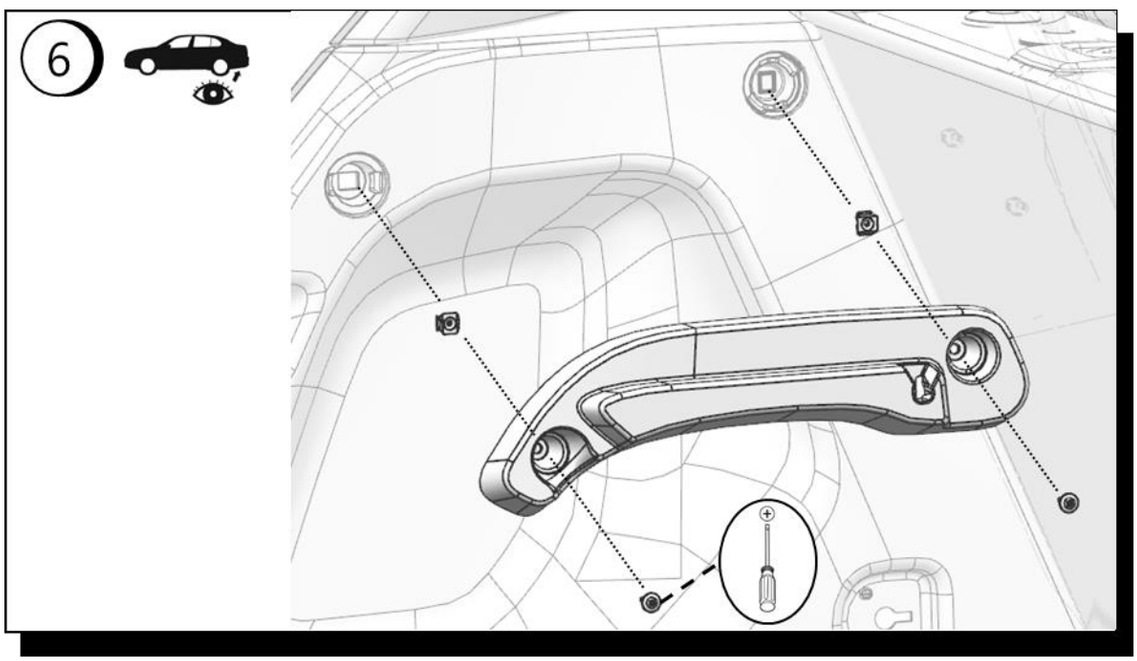
6

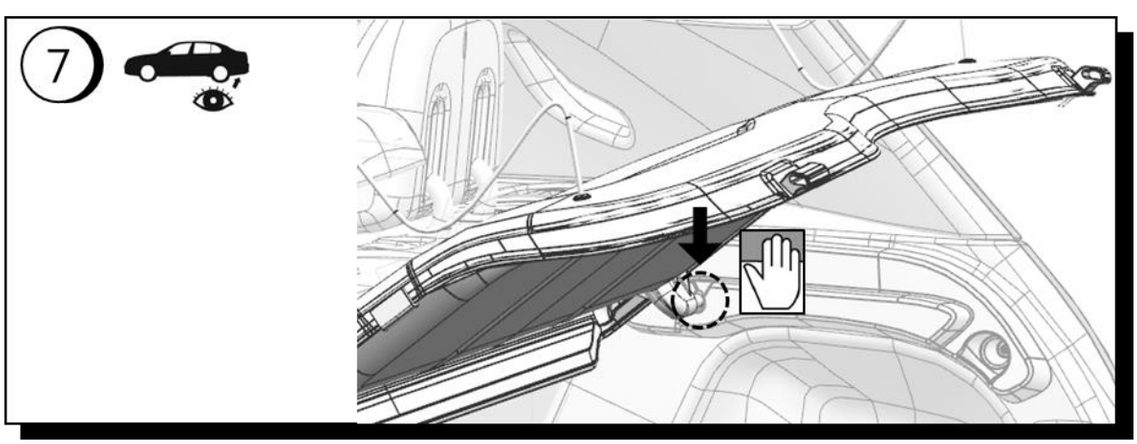
7